www.WOODFORDTRAILERS.com

HIGH QUALITY TRAILERS FOR CLUB, PRIVATE AND PRO MOTORSPORTS

RL 6000

All RL 6000 models come with LED lights, Alko locking hitch,spare wheel,stainless steel tail gate,internal LED lights and hand pump as standard.large doors 1650mm wide,1730mm high hatch doors 600mm wide x 780mm high

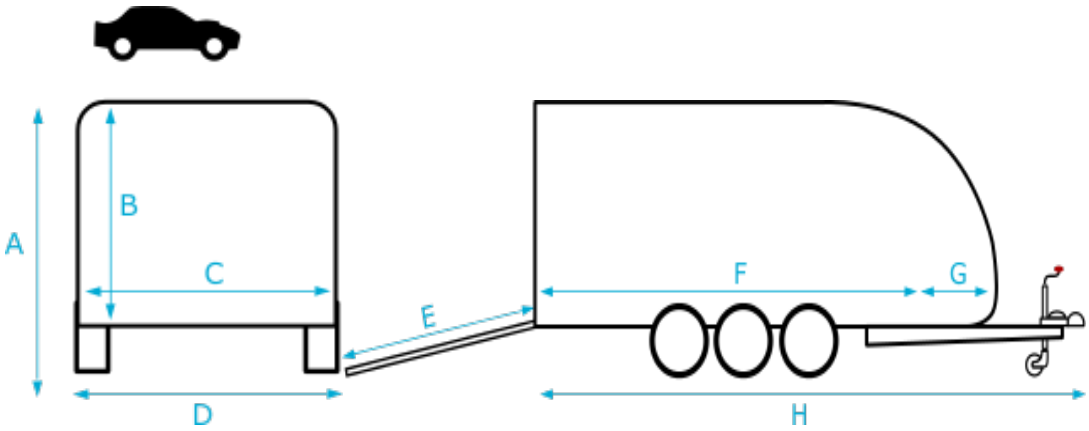

RL 6000 prices and optional equipment excl.vat;

Model	Bed size F,C		Load	Gross	Axles	Front storage space G	Overall higth A	Tail gate length B,E	Wheel size	Overall length H	Overall width D	Price ex VAT
	Feet and inches	mm	kg	kg	number	mm	mm	mm	inches	mm	mm	
RL6-010	18' X 7', tilt bed	5500 x 2100	2140	3500	3	250	2800	2040	10"	7500	2300	
RL6-011	18' X 7' 8" tilt bed	5500 x 2300	2110	3500	3	250	2800	2040	10"	7500	2500	
Part number	Optional extras											
OP002	Centre deck storage											
OP010	Electric winch 12000lb											
OP011	Electric winch 4500lb											
OP012	Electric winch 3500lb											
OP013	Electric winch 2500lb											
OP014	Set of 4 medium duty ratchet straps with loops 1000kg											
OP015	Set of 4 heavy duty ratchet straps with loops 2000kg											
OP016	Tyre rack(adjustable)											
OP023	Wheel clamp SAS											
OP025	Adjustable wheel chock(RL6000/RL7000)											
OP026	Second spare wheel											
OP027	Additional LED internal lighting system											
OP028	Shock absorbers(price per wheel)											
OP029	10" Alloy wheels (£59 extra per wheel)											
OP030	Assistor ramps set of two (aluminium)											
OP031	Wireless remote control for electric winch											
OP032	Special tie down rails set of 4											
OP033	4 Jerry can box and stands											
AKSA02	3500kg AL-KO stabiliser											

WWW.WOODFORDTRAILERS.COM